IOTAFLOW
SYSTEMS PVT. LTD

ULTRASONIC BIOGAS FLOWMETER USER MANUAL

www.iotaflow.com

Content

I FOREWORD.....3
II PRODUCT DELIVERY LIST.....3
1 PRODUCT INTRODUCTION.....4
1.1 Product Characteristics.....4
1.2 Working Principle.....4
1.3 Technical Data.....5
1.4 Drawing & Install Size.....6
2 INSTALLATION.....8
Requirements on working environment.....8
Requirements on installation:.....8
3 Operation of Flow Meter.....12
4 Common Breakdown and Solutions.....13
5 Communication Protocol.....13

Foreword

Thanks very much for buying our ultrasonic flow meter!
1. Pls read carefully and follow this manual to install, operate and repair the flow meter. Inappropriate use may lead to body injuries and damage of flow meter.
2. Do not change the construction and components of flow meter without our authorization. Otherwise, we will not be responsible for the safety accidents and abnormality of flow meter.
3. The specification of flow meter and contents of manual will update along with technology improvement.We will not notify in advance, pls kindly note.
4. End user of flow meter must keep this Manual on hand.
5. We have the final interpretation right for the ultrasonic flow meter Manual.

Product Delivery List

The actual delivery list will vary along with contract. Pls check packed items one by one with delivery list upon receipt and fill in the receipt list.If received goods is inconsistent with delivery list, pls contact us.

Item No.	Name	Quantity（unit）	Remark
1	BF-3000 Ultrasonic Biogas Flowmeter	1 （set）	
2	Manual	1(copy)	
3	Product Certification&Warranty Card	1 （copy）	
4	Connection Wire with aviation plug	1 pc	

1. Product Introduction

1.1 Product Characteristics

The Ultrasonic Biogas flow meter UF-BioSonic-50 using latest ultrasonic transit-time technology to measure flow. With advantages of no moving parts, on pressure loss, wide range ability / turn down ratio, corrosion resistance, the meters are capable of providing reliable long-term accuracy and require no routine maintenance. It is also designed for wet and corrosive working condition, with biogas composition reading at real time. Compare to thermal dispersion mass and differential pressure flow meter, the BF-3000 flow meter is able to supply the optimized solutions for biogas, without pressure drop, high corrosive resistance, longer lifetime & lower maintenance, higher precision for changing composition and so on..

- Digital display, functional and intuitive
- No moving part, corrosion resistant, few pressure losses.
- Ultrasonic technology, high precision, long lifetime, stable performance
- No special maintenance for long time operation.
- Highly integrated, good looking appearance, easy installation
- Built-in industrial lithium battery
- Strong corrosion resistance from high H2S and moisture
- Low-flow measurement function available
- All-in-one detect probe, measure flow velocity, temperature and composition directly.

1.2 Working Principle

Ultrasonic flow meter works under the principle of the relations between sonic wave travel time in flow media and flow rate. The actual speed of sonic wave in medium, usually speaking, is combined of flow speed of sonic wave (c_f) in static condition of media and the component of average axial flow velocity of fluid(v_m) in travel direction of sonic wave.
As below picture shows,
upstream and downstream travel time is calculated as formula 1 and 2.

Formula 1: $t_{down} = t_{AB} = \dfrac{L}{(c_f + v_m \cos\phi)}$ Formula 2: $t_{up} = t_{BA} = \dfrac{L}{(c_f - v_m \cos\phi)}$

t_{up} ——upstream travel time of ultrasonic wave in fluid;

t_{down} ——downstream travel time of ultrasonic wave in fluid;

L ——length of sound channel;

c_f ——Transit speed of sonic wave in static condition of media;

v_m ——average axial flow velocity of fluid;

ϕ ——angle between sound channel and fluid;

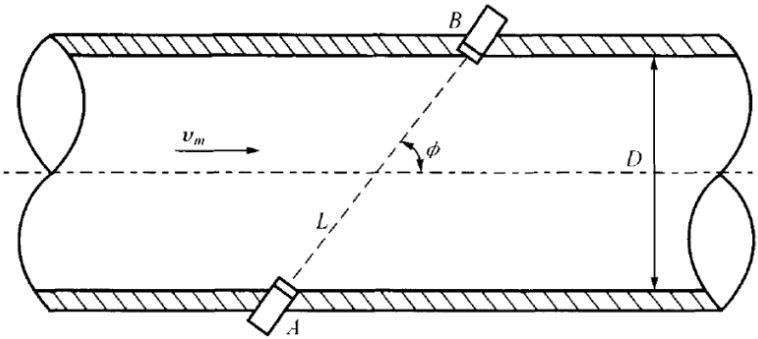

According to the formula 1 and formula 2, the flow speed of fluid is calculated as follow.

$$v_m = \frac{L}{2\cos\phi}\left(\frac{1}{t_{down}} - \frac{1}{t_{up}}\right)$$

Volume flow rate q_v is the flow velocity of fluid v_f times the orifice area A. Formula is as follow.

$$q_v = Av_m$$

1.3 Technical Data

Applicable pipeline	DN32	DN50	DN80	DN100	DN125	DN150	DN200	DN250	DN300
Flow range (m^3/h)	1.3 ~ 65	3.2 ~ 160	4.8 ~ 240	8 ~ 400	12 ~ 600	16 ~ 800	32 ~ 1600	48 ~ 2400	64 ~ 3200
Interface	1″1/4	2″	Convex flange						
Accuracy	Class 1.5								
Working pressure	0 ~ 200kPa								
Working temperature	-10℃ ~ 40℃								
Humidity	≤99%								
CH4 composition	Range 30 ~ 100%VOL，Accuracy±5%FS								

Power supply	External power supply:Safety barrier Ui=5V，Ii=100mA（main power supply）； Internal battery：3.6V LS26500（backup power supply）
Communication	RS485
Explosion levels	ExibIIAT4 Gb
Protection class	IP65

Attention：

- This product is just for measurement of biogas. “Concentration” and “Volume” functions can be normal only when concentration of CO_2 in biogas is below 70%VOL. Otherwise, flow meter shows “CO_2 Err” warning.
- When concentration of CH_4 in biogas is lower than 30% VOL, the “Accumulated Volume” will not increase, but the instant flow measurement function can still work.
- If using this product in conditions other than the above description, please contact the manufacturer before installation.

1.4 Drawing &Install Size

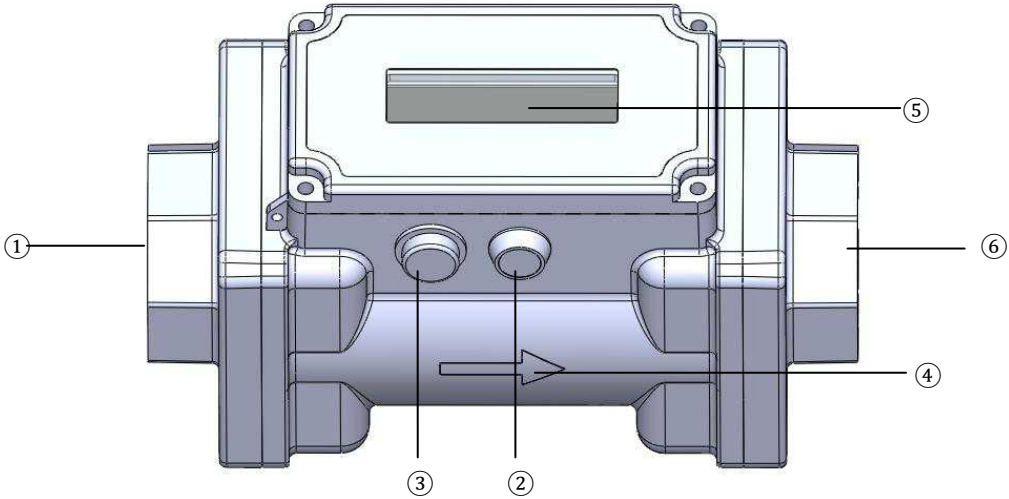

1---AIR INLET

2 --- FUNCTION KEY

3 --- POWER、COMMUNICATION INTERFACE

4 --- AIR FLOW DIRECTION

5 --- DISPLAY SCREEN

6 --- AIR OUTLET

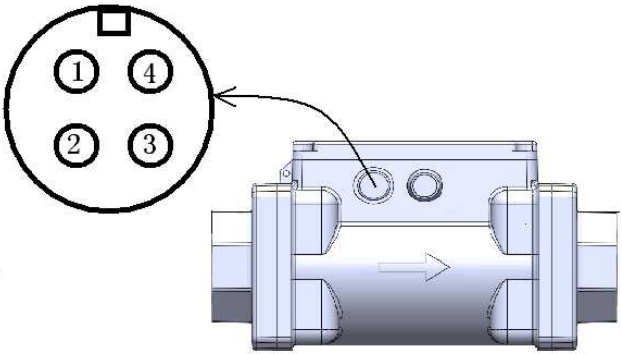

No.	1	2	3	4
Definition	+5V	TB	TA	GND
Function	anode	RS485		cathode

Screw connection & lead foot definition (screw install as example)

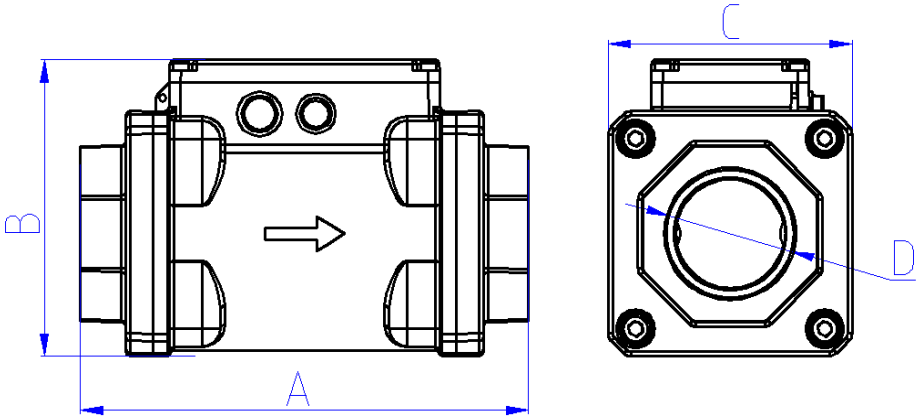

Screw install way & size drawing

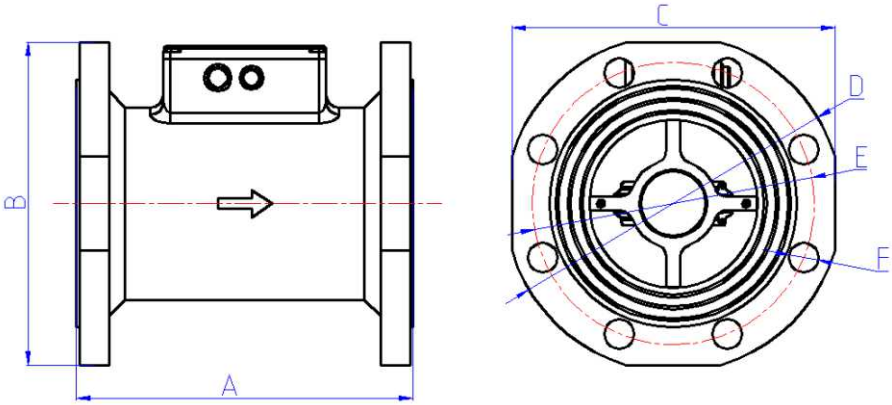

Flangeinstall way & size

Size / Nominal diameter	A	B	C	D	E	F
DN32	119	114	90	1″ 1/4	-	-
DN50	119	132	109	2″	-	-
DN80	250	186	186	Φ 200	160	8- Φ 18
DN100	250	206	206	Φ 220	180	8- Φ 18
DN125	250	236	236	Φ 250	210	8- Φ 18
DN150	250	270	270	Φ 285	240	8- Φ 22
DN200	250	330	330	Φ 340	295	12- Φ 22
DN250	250	390	390	Φ 405	355	12- Φ 26
DN300	250	440	440	Φ 460	410	12- Φ 26

BF-3000structure size table(unit：mm)

2 Installation

Requirements on working environment

1. Working Temperature: -10ºC ~ +40ºC;
2. Working Humidity: ≤99% RH
3. Ambient Atmosphere Pressure: 86 ~ 106kPa;
4. Medium Gas Pressure: 0-200kPa
5. Away from the locations with strong electromagnetic and electronic interference;
6. Away from the locations with strong mechanical vibration;

Requirements on installation

1. Flow Direction

The direction of the arrow on the flow meter should be the same as the gas flow direction in the piping.

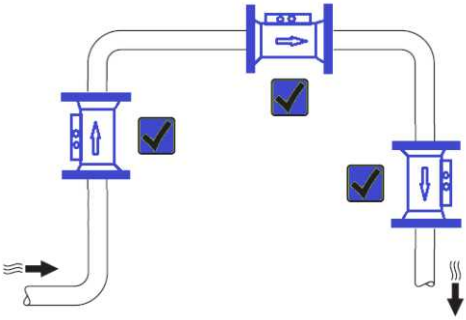

2. Flange Connection

The internal diameter of the pipe must match the internal diameter of the flow meter

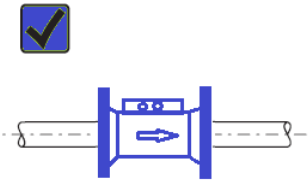

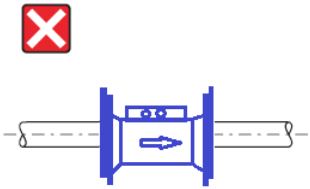

3. Installation Orientation

The LCD display of the flow meter is recommended to face upward straightly and should not be installed facing downward or sideward.

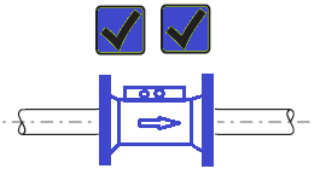

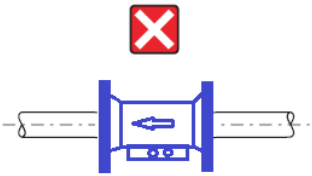

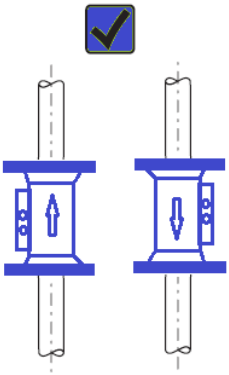

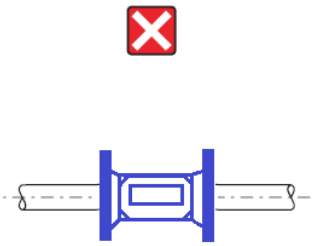

4. Inlet and Outlet Runs

The BF-3000 flow meter should be installed upstream of assemblies, such as valves, T-sections, elbows etc. where possible. As a minimum, the inlet and outlet runs shown below must beobserved to achieve the specific accuracy of the device.

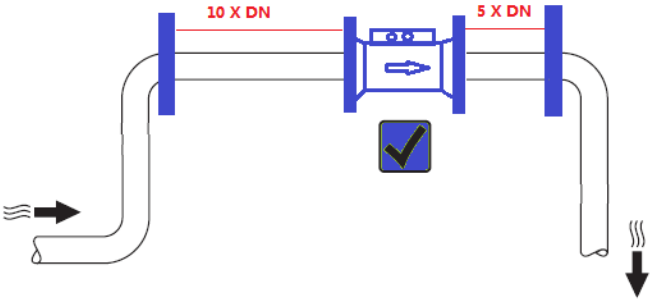

5. Installation Instructions:

5.1 Install flow meter horizontally indoors after dehydration and desulfuration processes.

5.2 Incline flow meter outlet downward about 2° to discharge condensed water is permitted.

5.3 The LCD display of the flow meter should not be installed facing downward or sideward.

5.4 In order to eliminate the adverse effects of condensate in the biogas pipeline, it is recommended to install a drain valve before the straight pipe and raise the installation position of the flow meter properly so that the condensate is effectively discharged at the discharge port at the front end;

5.5 Suggest installing the flow meter on a bypass pipe section that in parallel to the main pipeline, so as to facilitate the maintenance of the flow meter without interrupt production.

5.6 The pipe at the entrance of the biogas flow meter must be fitted with a valve for closing the gas line in maintenance period.

5.7 The inner diameter of the flow meter body should be the same as that of the installation pipeline, which is especially important for the straight pipe section upstream of the flow meter.

5.8 Gaskets such as protruding pipes may cause interference to the flow field distribution. Take measures to ensure that the gasket is on the flange sealing surface and keep concentric with the flange and never allow a gasket protruding into the pipeline;

5.9 Check the flow meter measuring tube cavity is clean or not. Any vapor, grease or dust need to be cleaned in time before installation.

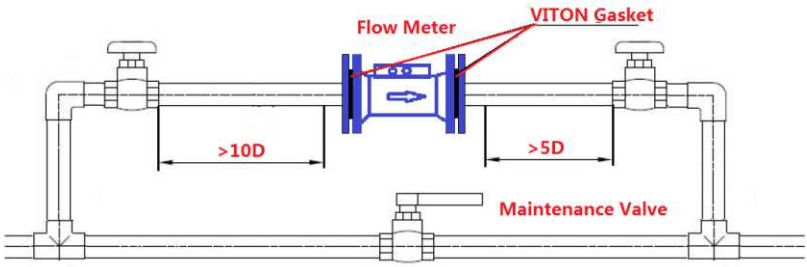

Flange connection installation

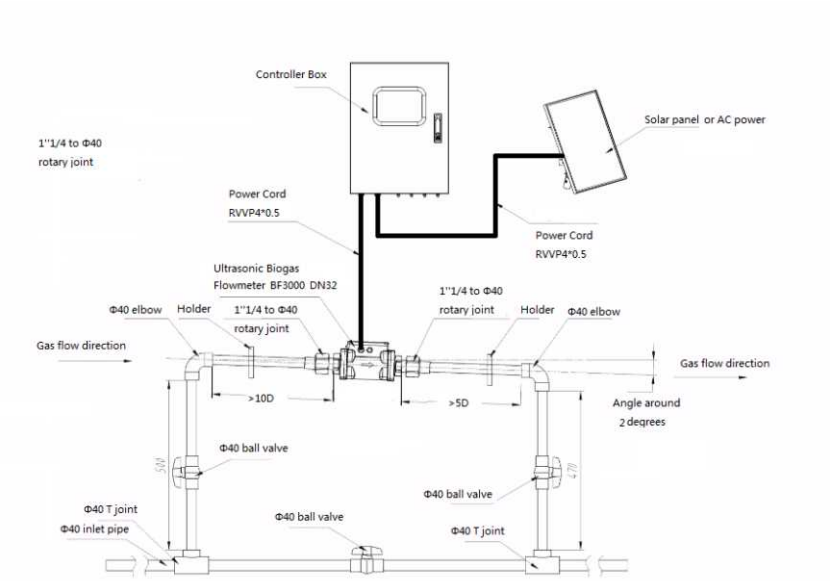

crew connection installation

Attention:

The flowmeter should be installed horizontal to the ground and the LCD display should face to upside straightly. LCD display faces to lateral side is not permitted

3. Operation of Flow Meter

Ultrasonic flow meter will work after switch on. After 1 minute of preheating, it will show the accumulated Volume interface automatically. You can switch the interface among Volume, Composition, Gas Temperature, Gas pressure and Flow Rate by function key or serial port command.

Remark： For RS485 communication application, pls refer to the appendix of “ BF-3000 Ultrasonic Biogas Flowmeter Communication Protocol”.

The interface of ultrasonic flow meter shows as follow.

Interface	Column
	Totalized Volume
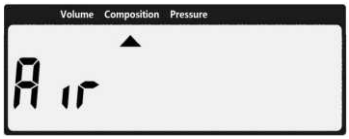	Composition（Air）
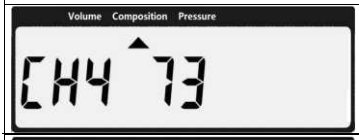	Composition（CH4）
	Instant Flow Rate
	Gas Temperature
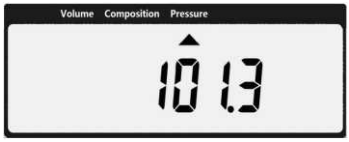	Gas Pressure
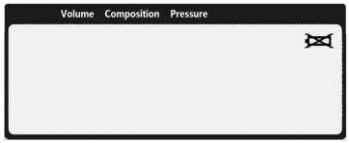	Low Battery Warning

4 Common Breakdown and Solutions

Breakdown	Reasons	Solutions
No display on the screen	Switch off or plug wire of battery failed in connection	Switch on or plug wire
Flow rate shows zero	Valve of pipe closed or no air flow	Open valve or check air flow
Communication failure	IP address differs from address in communication order;No external power supply	Set the correct IP address; Connect external power

- If you have tried above solutions and problem remain unsolved, pls contact the manufacturer.
- Do not open the flow meter without professional instructions or authorization of manufacturer. Otherwise, you will responsible for damage and manufacturer have the right to refuse maintenance.
- Pls read carefully the Manual before use in order to avoid body injuries and flow meter damage.

5 Communication Protocol

I. Protocol Overview

This protocol is based on Modbus-RTU communication, the communication interface is RS485. Communication format: 9600bps, DataBits: 8, StopBits: 1, Parity: No. Information transfer is mainly from the query mode, and in bytes. In this protocol, the lower computer will not send data to the upper computer automatically, it only reply the corresponding data after the upper computer sends the instruction.

II Functions Instruction

1. Real Time Data Reading

Upper Computer Request

ID	Function Code	Address High	Address Low	Reading Number High	Reading Number Low	CRC_L	CRC_H
ID	0X03	0X00	0X01	0X00	0X09		

Lower Computer Request (BF-3000)

ID	Function Code	Byte Count	Temperature				Pressure			
ID	0X03	0X12	Temp 1	Temp 0	Temp 3	Temp 2	Press1	Press0	Press1	Press0

Concentration		Flow				Summed flow			
Concentration H	Concentration L	FLOW1	FLOW0	FLOW 3	FLOW2	Total1	Total0	Total3	Total2

CRC_L	CRC_H

Response Error

ID	Function Code	Error Code	CRC_L	CRC_H
ID	0X03	Error Description		

Notes:

(1) Temperature is transferred in floating-point data format.

(2) Pressure temperature is transferred in floating-point data form

(3) Measuring concentration=concentration H*256+ concentration L

(4) Flow temperature is transferred in floating-point data form

(5) Summed flow = （（Total3 *256+ Total2）*65536+Total1 *256+ Total0

(6) ID default： 0x01

2 Sensor reading ID

Upper Computer Request ：

ID	Function Code	Address High	Address Low	Register Value High	Register Value Low	CRC_L	CRC_H
0X00	0X06	0X00	0XC8	0X00	0X00		

Low Computer Request

ID	Function Code	Address High	Address Low	Register Value High	Register Value Low	CRC_L	CRC_H
0X00	0X06	0X00	0XC8	0X00	ID		

2. Error Description

When upper computer request or adjust data, the lower computer response error description is as following form 2.3.1:

Value	Description
0X01	This function code is not existing
0X02	Starting address + number of registers is abnormal.
0X03	Register data is abnormal, normal range of register data is 0X0001-0X007D
0X04	The address of this register is not existing

Form 2.3.1 Error Description

3. CRC Checking

CRC checking refers to 0XA001-RTU standards, low number is the front, high number is in the back, please see below form 2.4.1 shows:

ID	Function Code	High Register	Low Register	High Number	Low Number	CRC_L	CRC_H
0X01	0X03	0X40	0X01	0X00	0X02	0X80	0X0B

Form CRC Checking Example

CRC checking C language to implement code as following:

```
//CRC checking RTU standard 0xa001，  Msg means groups need to calculate, Len
Calculated length
unsigned short CRC16(unsigned char *Msg, unsigned short Len)
{
    unsigned short CRC_16 = 0xffff;
    unsigned short i,temp;
    while(Len--)
    {
        CRC_16 = CRC_16^(*Msg++);
        for(i=0;i++<8;)
        {
            if(CRC_16&0x0001)       CRC_16 = (CRC_16>>1)^0xa001;
            else                    CRC_16>>=1;
        }
    }
    temp = CRC_16&0xff;
    CRC_16 = ((CRC_16>>8)&0xff)+(temp<<8);
    return(CRC_16);
}
```

III. Data item definition

Code Type	Address DEC/Word	Type	Function	Register length Byte	Description	Notes
User Code	0001	R	03	4	Temperature	
User Code	0003	R	03	4	Pressure	
User Code	0005	R	03	2	Concentration	
User Code	0006	R	03	4	Flow	
User Code	0008	R	03	4	Summed flow	
Factory Code	200	R	06	2	Current Instrument ID	
Factory Code	201	W	06	2	Setting Instrument ID	ID setting range :1~254, ID cannot be 6, default ID: 1

Notes: In remote device, this function code can be used to read the contiguous block content of holding registers. The request PDU describes the starting register address and the number of registers. Address register is started from scratch. Therefore, the address register 1-16 is 0-15. For example, 03 reads real-time pressure, the actual sending is ID 03 00 03 00 02 CRC_L CRC_H.

IV. Application example

4.1 All data reading:

Actual sending : ID 03 00 01 00 09 CRC_L CRC_H。

Actual return: ID 03 00 01 00 12 temp1 temp0 temp3 temp2 press1 press0 press3 press2 CONC1 CONC0 FLOW1 FLOW0 FLOW3 FLOW2 Total1 Total0 Total3 Total2 CRC_L CRC_H。

4.2 Temperature data reading:

Actual sending: ID 03 00 01 00 02 CRC_L CRC_H。

Actual return: ID 03 00 01 00 04 temp1 temp0 temp3 temp2 CRC_L CRC_H。

4.3 Pressure data reading

Actual sending : ID 03 00 03 00 02 CRC_L CRC_H。

Actual return: ID 03 00 03 00 04 press1 press0 press3 press2 CRC_L CRC_H。

4.4 Concentration data reading

Actual sending : ID 03 00 05 00 01 CRC_L CRC_H。

Actual return: ID 03 00 05 00 02 CONC1 CONC0 CRC_L CRC_H。

4.5 Flow data reading

Actual sending : ID 03 00 06 00 02 CRC_L CRC_H。

Actual return: ID 03 00 06 00 04 FLOW1 FLOW0 FLOW3 FLOW2 CRC_L CRC_H。

4.6 Summed flow data reading

Actual sending : ID 03 00 08 00 02 CRC_L CRC_H。

Actual return： ID 03 00 08 00 04 Total1 Total0 Total3 Total2 CRC_L CRC_H。

4.7 Instrument reading ID

Actual sending : 00 06 00 C8 00 00 CRC_L CRC_H。

Actual return： 00 06 00 C8 00 ID CRC_L CRC_H。

4.8 Setting Instrument ID

Actual sending : 00 06 00 C9 00 ID CRC_L CRC_H。

Actual return： 00 06 00 C9 00 ID CRC_L CRC_H。

Note: ID = Current instrument ID.

IOTAFLOW
SYSTEMS PVT. LTD

ULTRASONIC BIOGAS FLOWMETER USER MANUAL

Contact Us:-

IOTAFLOW SYSTEMS PVT. LTD.

A-2/13, Mayapuri Industrial Area
Phase-II, New Delhi - 110064
Phones: +91-11-4625 4601-06
Call: +919910693866
email: contact@iotaflow.com

Specifications subject to change without prior notice. © Iotaflow Systems Pvt. Ltd.

" If You Want To Manage It, Measure It "

www.iotaflow.com